4000 CONNOR COLLECTION DOUBLE TOILET PAPER HOLDER

BOLD UNIQUE SMOOTH

sales@preferredbathinc.com
www.preferredbathinc.com
(336) 904-6248

Preferred Bath Accessories

DOUBLE TOILET PAPER HOLDER

PART NUMBERS	FINISH
4008-PC-FMDH	POLISHED CHROME

- MODERN STYLING SIMPLY FUNCTIONAL
- SUPERIOR STRONG MOUNTING SYSTEM
- 304 STAINLESS STEEL BAR WITH ZINC DIE-CAST POST
- TWO SCREWS INCLUDED FOR A STRONG SECURE INSTALLATION

HARDWARE INCLUDED

- DOUBLE TOILET PAPER HOLDER AND POST ASSEMBLY - 1
- ALUMINUM WALL MOUNTING BRACKETS - 1
- STAINLESS STEEL MOUNTING HARDWARE AND WALL ANCHORS INCLUDED

WALL MOUNTED

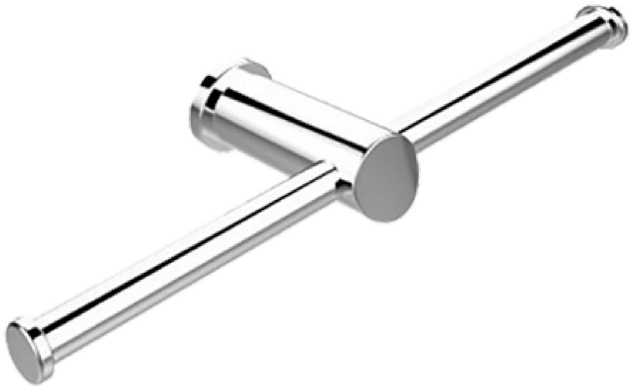

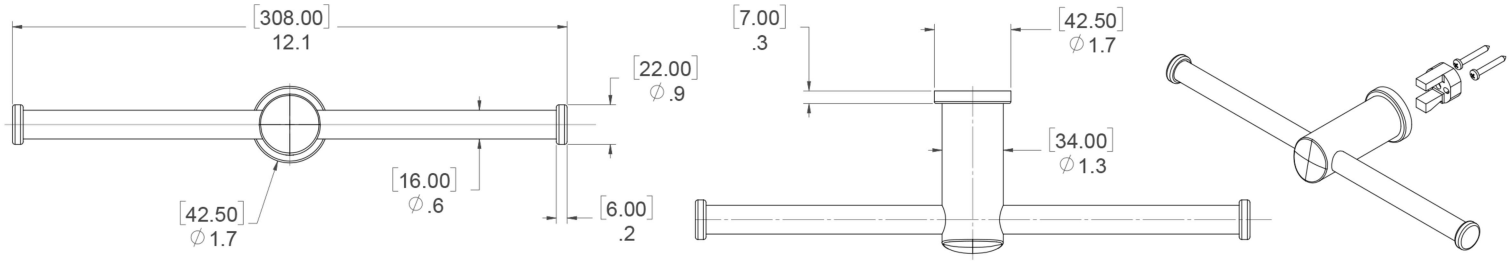

INSTALLATION:

Attach mounting bracket to wall with mounting screws. Slide post over bracket and tighten set screw.

WOOD BLOCKING IS THE PREFERRED METHOD OF INSTALLATION

Limited Warranty:
Preferred Bath Accessories Inc. warrants to the purchaser that the product will be free from defects in material and workmanship. If the product does not comply with this warranty, Preferred Bath Accessories Inc. will repair or replace the product or, at Preferred Bath Accessories Inc's. option, refund the purchase price. The limited warranty period is for the lifetime of the product. Limitations on the Warranty: The warranty does not cover, normal wear and tear, product abuse, neglect, improper installation or maintenance. Purchaser Requirements: If this product does not meet Preferred Bath Accessories Inc's. warranty, return the product (postage prepaid) to the place of purchase with proof of purchase and a written claim briefly describing the defect. You may be required to provide other information or evidence of the defect.